Notebook tray for VESA 100x100 bracket

Model :AON01

SPECIFICATIONS	
Mounting pattern	100x100 mm
Screw Type	M4
Material	Steel/Plastic
Dimension(W*H*D)	263*154*401 mm
Weight	1.6Kg (3.52lbs)
Tilt	Max. +90° / -20°
Support max. weight	5.5Kg(12.1lbs)
Max.Working Space	227~401 mm

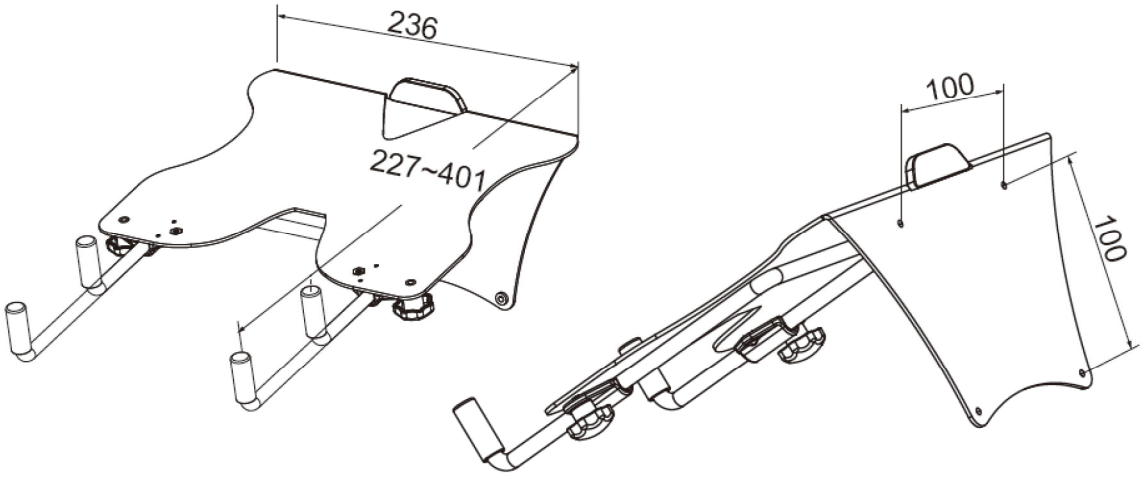

Ladders & Hardware Pte Ltd | Jia Ying Trading Pte Ltd
1 Rochor Canal Road #02-37/67 Sim Lim Square Singapore 188504
Tel: 6336 0404 Fax: 6338 0404
www.jiaying.com | www.laddersandhardware.com | jiaying@singnet.com.sg | email@jiaying.com