Care-Aid Series

CNH01

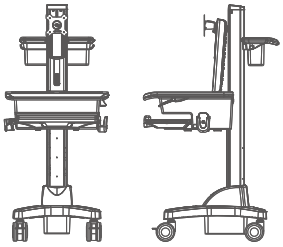

Series	Care-Aid Series	
Model Name	CNH01	
Functional Description	Mobile Cart For Medical / Healthcare IT	
Item	Sub-title	
Complete System		
	Net Weight	68.36 lbs (31 kg)
	Packaged Dimension	800x630x1460 mm
Display System		
Hinge Module	Tilt	-5°(down) ~ +25°(up)
	Pivot	360°
	User Torque Adjust	available
Display Support	Mount Pattern	VESA 75x75/ 100x100 mm
	Panel Size Support	≤ 24”
	Max. Weight Load	17.6 lbs (8 kg)[1]
	1. Please refer to Compartment Item for the weight Load support of laptop/notebook.	
Height Adjust	Range	5.12" (130 mm)
	Tension Torque Adjust	Yes
Cable Management		Yes
	1. Optional Cable Consolidation will be utilized with the opening holes at the bottom sides of CPU Compartment.	
Working Space		
Type	Desk	Open Workspace (Seamless)
Effective Working Space	Dimension	517x376 mm
	Max. Load (including compartment)	16.5 lbs (7.5 Kg)
	Skidproof	Yes
Protection	Antimicrobial Processed	Yes
	If the CPU ≥ 11.0 lbs (5 kg) or total weight of Panel & CPU ≥ 28.7 lbs (13 kg), an external CPU Holder is suggested to fix the CPU.	
Storage		
CPU Compartment	Max. Effective Dimension	425x325x100 mm
	Key Lock	Yes
Keyboard Tray	Max. Effective Working Dimension	449x207 mm
	Wrist Comfort	Yes
Mouse Pad	Max. Working Space	217x213 mm
	Right-Left Slide in-&-out	Yes
	Mouse Holder	Yes
Scanner Holder		Yes
Base System		
Cart Base	Material	Plastic / Steel
Caster	No.	4
	Locking	Front 2
	Low Noise	Yes
Main Lift	Lift Handle	Yes
	Height Adjust Range	19.7" (500 mm)
	Tension Torque Adjust	Yes
	*Locking the LCD Height Adjust Module (HAM) & Main Lift are always essential when the cart on move.	

Dimensions

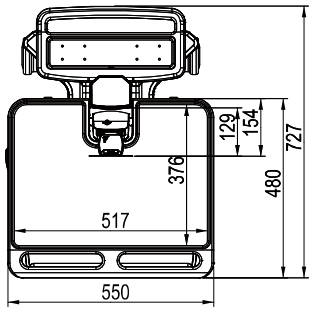

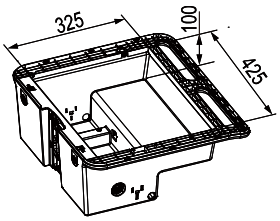

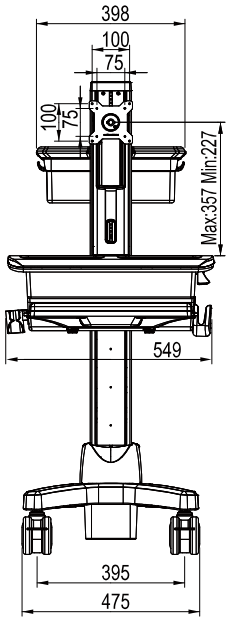

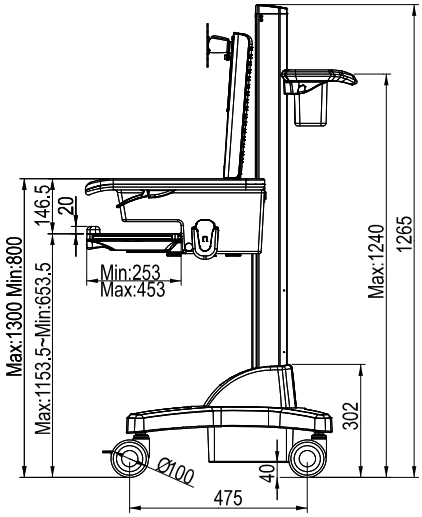

Product Features

Accessories

Medicine Bins

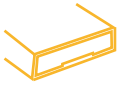

Utilitiy Drawer

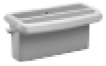

ACD01

ACP01

Ladders & Hardware Pte Ltd / Jia Ying Trading Pte Ltd
1 Rochor Canal Road #02-37/67
Sim Lim Square Singapore 188504
Tel: 6336 0404 Fax: 6338 0404
www.jiaying.com | www.laddersandhardware.com
jiaying@singnet.com.sg | email@jiaying.com