LCD Monitor Table Arms

Specification

- ◆ Loading capacity from 3.0 to 8.0 kg
- ◆ Meet VESA standard: 75*75 / 100*100 mm
- ◆ Spec & Features:

—Monitor: 360° rotation

—Monitor arm vertical movement:+60°/-30°

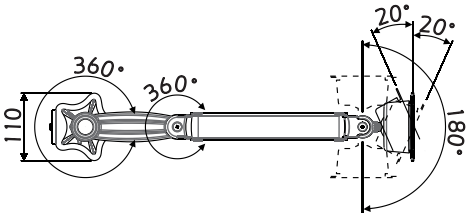

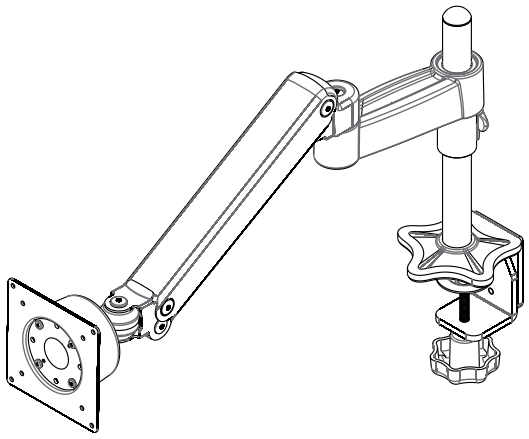

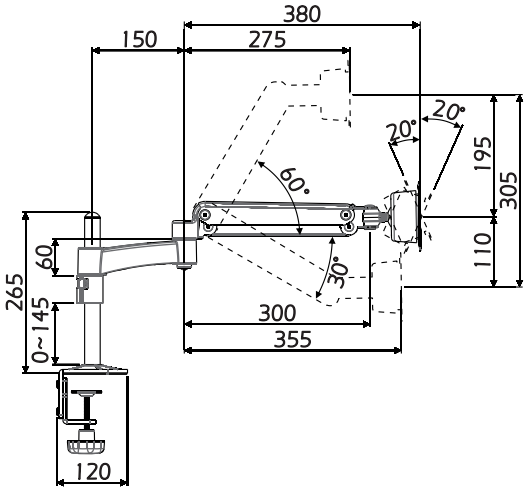

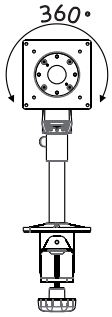

(Unit: mm)

Parts List

MAIN PARTS

ITEM	❶	❷	❸	❹	❺	❻	❼	❽
PART				M6x12				
QTY	1	1	1	2	1	1	1	1

PARTS FOR TV BRACKETS

ITEM	ⓐ	ⓑ	ⓒ	ⓓ	ⓔ	ⓕ	ⓖ	ⓗ	ⓘ	ⓙ	ⓚ
PART			M6x15	M6x8	Ø4x10		M4x8	M4x12	D4	D5	M6
QTY	1	1	1	1	1	3	4	4	1	1	1

⚠ Be aware of the specification on the first page.

⚠ Please evaluate the desk material whether it is suitable for installation.

⚠ Recommend other people to hold LCD monitor /TV when doing installation.

⚠ Unplug all cables off the objects when installing.

⚠ Follow these instructions to tighten or loosen tension.

⚠ **Stored Energy Hazard:** The arm mechanism is under tension and will move up rapidly, on its own, as soon as attached equipment is removed. For this reason, do not remove equipment unless the arm has been moved to the highest position! Failure to follow this instruction may result in serious personal injury and/or equipment damage!

LCD Monitor Table Arms
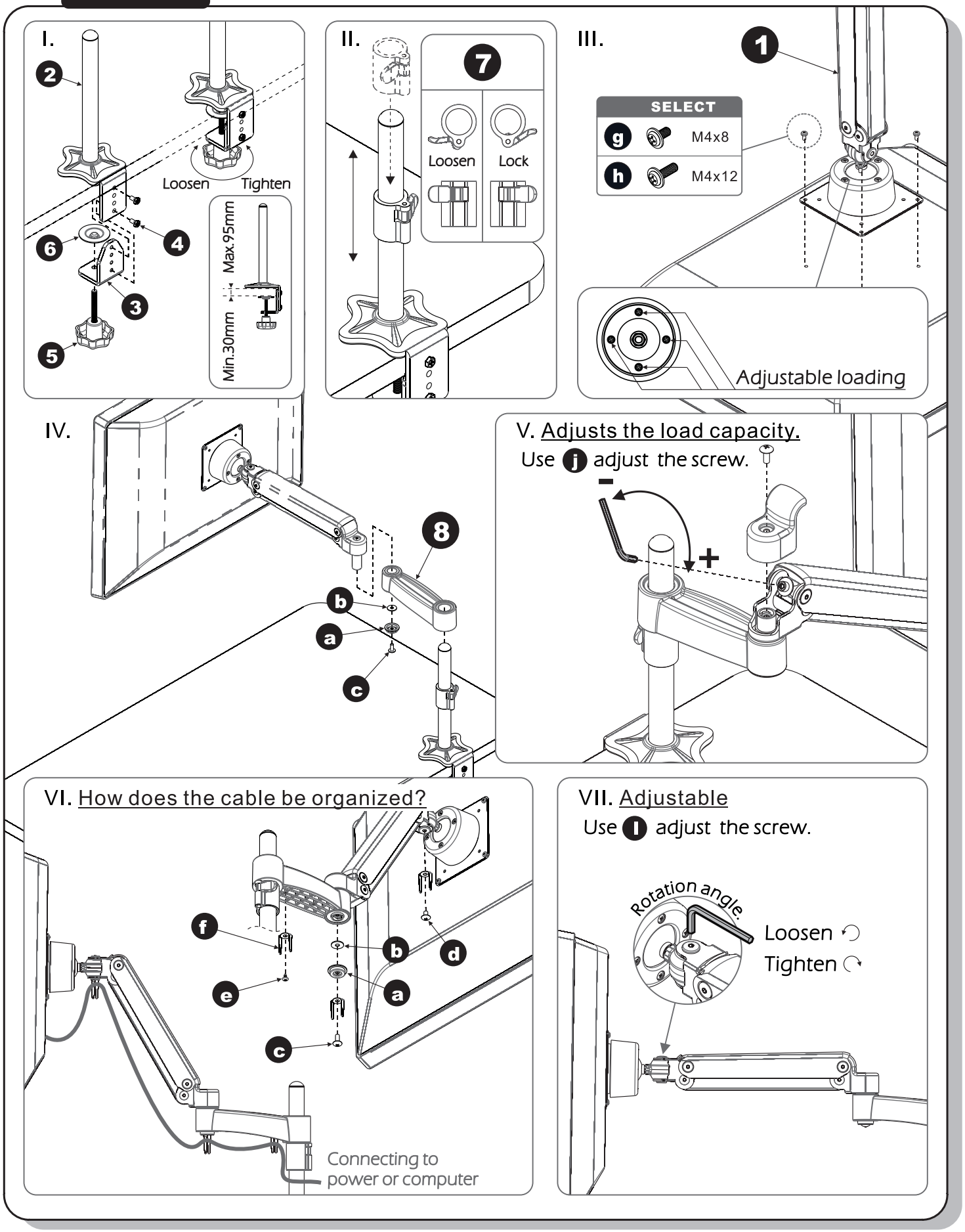
installation